CBSE Class 12 Engineering Graphics 2007 - Set 68

Question Paper

Conducted by the Central Board of Secondary Education (CBSE)

Time Allowed: 3 Hours **Maximum Marks: 70**

General Instructions

(i) Attempt all the questions.
(ii) Use both sides of the drawing sheet, if necessary.
(iii) All dimensions are in millimetres.
(iv) Missing or mismatching dimensions, if any, may be suitably assumed.
(v) Follow the SP 46:1988 codes, with first-angle method of projection.

Questions

1(a). Construct an isometric scale.

1(b). Construct an isometric projection of a frustum of a pentagonal-pyramid, base-side = 40 mm, top-side = 30 mm and height of axis = 60 mm. When resting on H.P. with its base on it, one of the base-sides is perpendicular to V.P. and the axis is perpendicular to H.P. Give all dimensions.

1(c). A hexagonal prism with base side = 30 mm and height = 40 mm, is resting on H.P. on its hexagonal base. One of its base sides is parallel to V.P. On the top hexagonal end, a sphere of 25 mm radius is centrally placed. Taking their common axis perpendicular to H.P., draw the isometric projection of the two solids. Give all dimensions.

2(a). Draw to scale 1 : 1, the plan and front view of a square nut, taking nominal diameter = 25 mm, keeping its axis perpendicular to H.P. and two opposite sides of the square parallel to V.P. Give standard dimensions.

OR

2(a). Draw to scale 1 : 1, the standard profiles of a square-thread and a knuckle-thread, taking pitch = 40 mm for each. Give standard dimensions.

2(b). Sketch free-hand the front view and top view of a stud with a square-neck, keeping the axis perpendicular to H.P. Take nominal diameter = 20 mm. Give standard dimensions.

OR

2(b). Sketch free-hand the front view and plan of a double-head feather key with gib head on both the ends, keeping its length parallel to H.P. and V.P. for a shaft of diameter = 48 mm. Give standard dimensions.

3. Figure 1 shows the parts of a foot-step bearing. Assemble these parts correctly and then draw the front view, left half in section to a scale full-size.

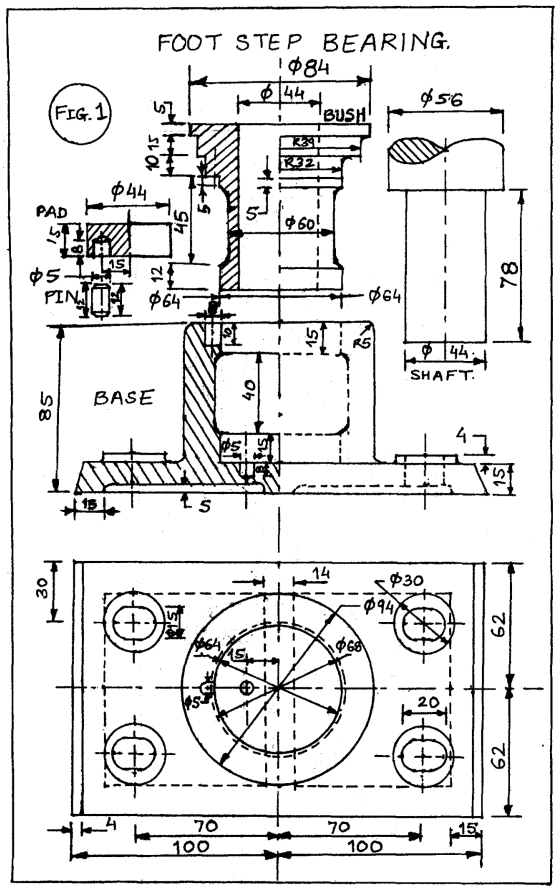

An enlarged drawing is provided in the drawing references at the end of this paper.

3(details). Print title and scale used. Give 6 important dimensions.

OR

3. Figure 2 shows the parts of a **gib and cotter joint for square rods**. Assemble these parts correctly and then draw the following views to a scale full-size :

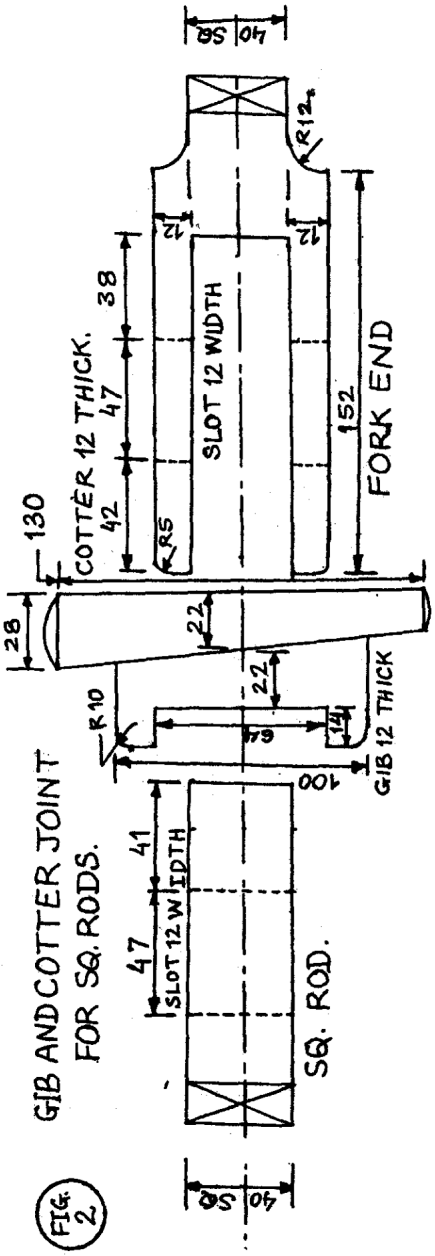

An enlarged drawing is provided in the drawing references at the end of this paper.

3(a). Front view, upper half in section

3(b). Plan

3(details). Print title and the scale used. Draw the projection symbol. Give 6 important dimensions.

collegedunia

Drawing reference

Question 3 — Figure 1

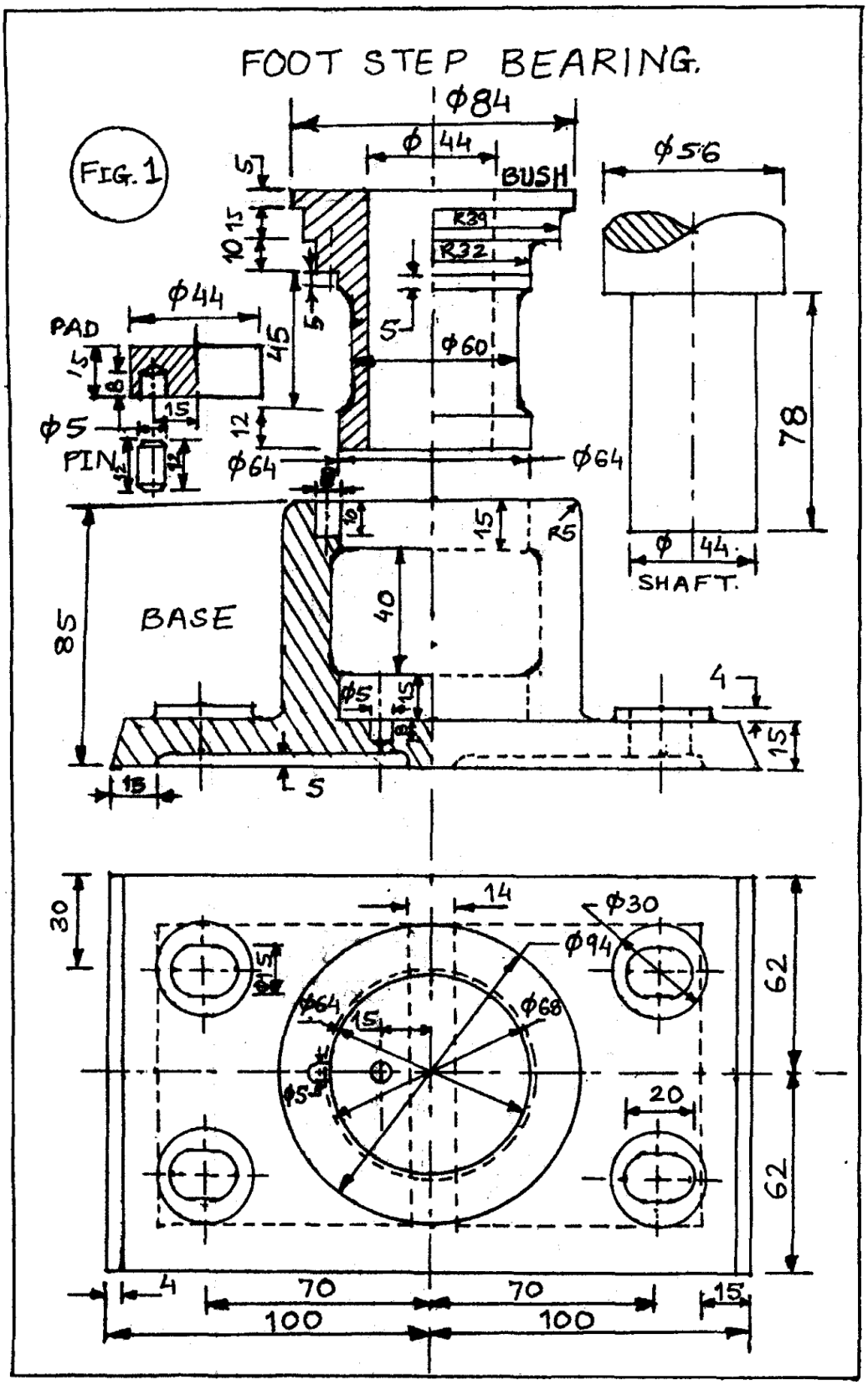

Drawing reference

Question 3 — alternative — Figure 2

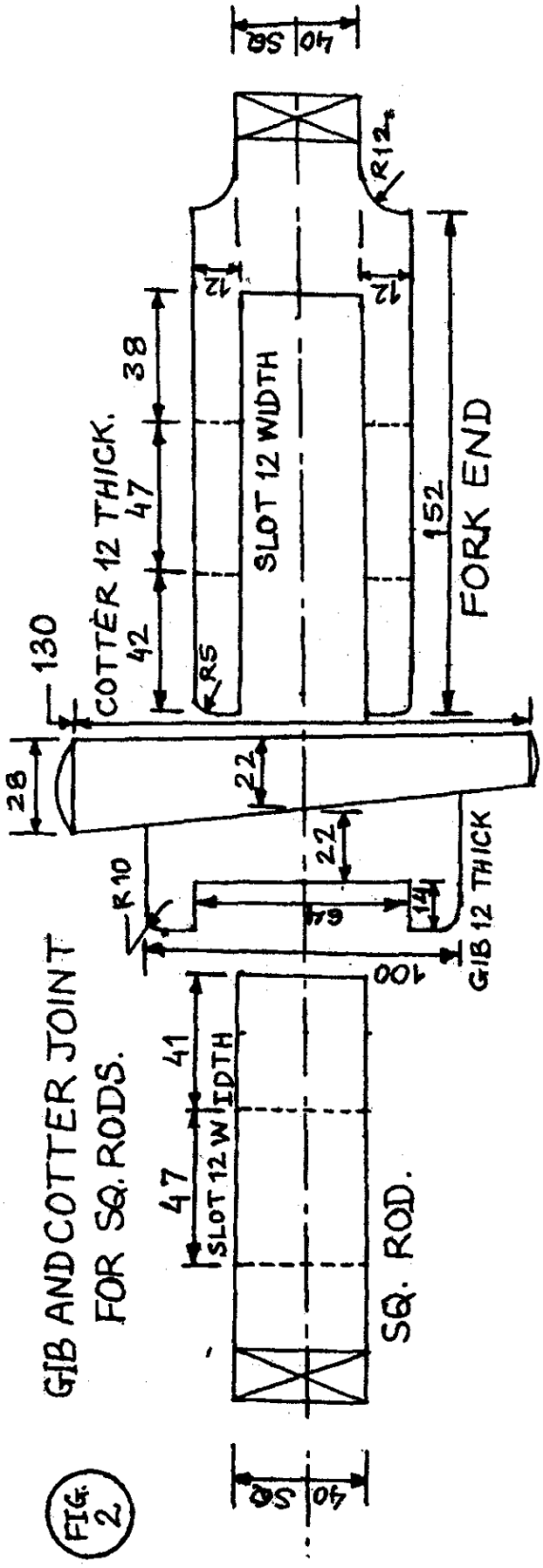

- End of Question Paper -