CBSE Class 12 Engineering Graphics 2011 - Set 68/1

Question Paper

Conducted by the Central Board of Secondary Education (CBSE)

Time Allowed: 3 Hours **Maximum Marks: 70**

General Instructions

(i) Attempt all the questions.
(ii) Use both sides of the drawing sheet, if necessary.
(iii) All dimensions are in millimetres.
(iv) Missing or mismatching dimensions, if any, may be suitably assumed.
(v) Follow the SP 46:1988 codes, with first-angle method of projection.
(vi) No hidden edges or lines are required in Question 1 or in sectional views of Question 3.

Questions

1(a). Construct an isometric scale, 110 mm long.

1(b). Construct the isometric projection, to isometric scale, of a hemisphere (diameter = 70 mm), resting on H.P. with its circular face on it. The axis is parallel to V.P.

Draw the axis, marking the centre of its circular base on H.P. Give dimensions.

1(c). A pentagonal pyramid (base edge 30 mm and height 70 mm) is placed, centrally, on the top triangular face of a triangular prism (base side 90 mm and height 30 mm), with its pentagonal base on the prism. One base side of the pyramid, is parallel to V.P. and away from it. One side of the base of the prism, is parallel to V.P. and closer to the observer.

Draw the isometric projection of the solids, placed together, to isometric scale. Draw their common vertical axis and indicate the direction of viewing. Give all dimensions.

2(a). Draw to scale 1 : 1, the front view and top view of a Square Nut, for a nominal diameter d = 30 mm, keeping its axis perpendicular to H.P. and two sides of the square, parallel to V.P. Give all standard dimensions.

OR

2(a). Draw to scale 1 : 1, the front view and top view of a Hook Bolt, taking nominal diameter = 26 mm and keeping its axis perpendicular to H.P. Give standard dimensions.

2(b). Sketch freehand the front view and the top view of a Stud with Collar, keeping the axis perpendicular to H.P. Take nominal diameter = 25 mm. Give standard dimensions.

OR

2(b). Sketch freehand the front view and the top view of a Pan Head Rivet (without tapered neck), keeping the axis vertical. Take diameter of the rivet as 25 mm. Give standard dimensions.

3. Figure 1 shows the details of the parts of a **Flanged Pipe Joint**. Assemble these parts, correctly, and draw, to scale 1 : 1, the following views :

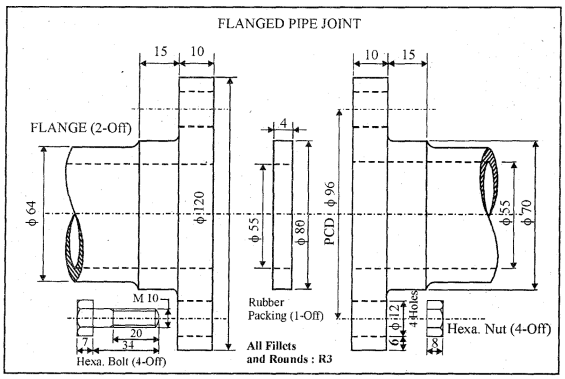

An enlarged drawing is provided in the drawing references at the end of this paper.

3(a). Front view, lower-half in section.

3(b). Side view, as seen from the right.

3(details). Print title and scale used. Draw the projection symbol. Give 6 important dimensions.

OR

3. Figure 2 shows the front view of a **Footstep Bearing** assembly. Dismantle the parts and draw the following views, to scale 1 : 1. Keep the same position of the parts with respect to H.P. and V.P. :

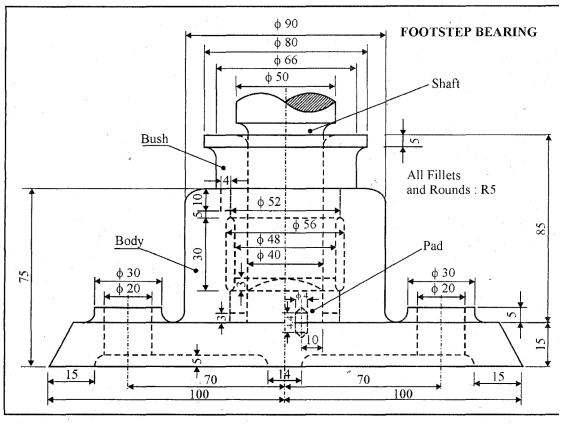

An enlarged drawing is provided in the drawing references at the end of this paper.

3(a). Front view of the Bush, showing the left half in section.

3(b). Front view of the Pad, showing right half in section.

3(details). Print titles of both and scale used. Draw the projection symbol. Give 6 important dimensions.

Drawing reference

Question 3 — Figure 1

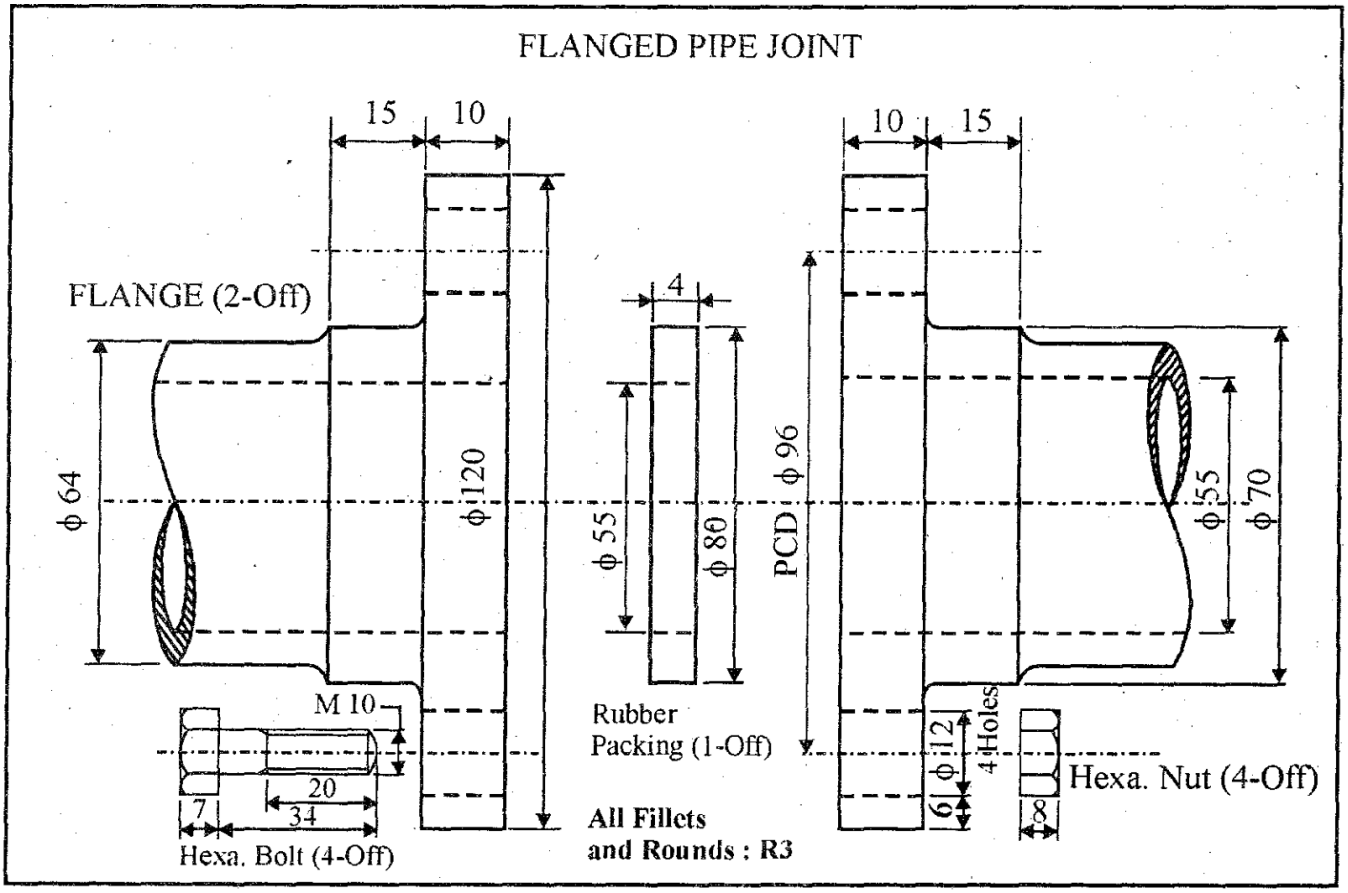

Drawing reference

Question 3 — alternative — Figure 2

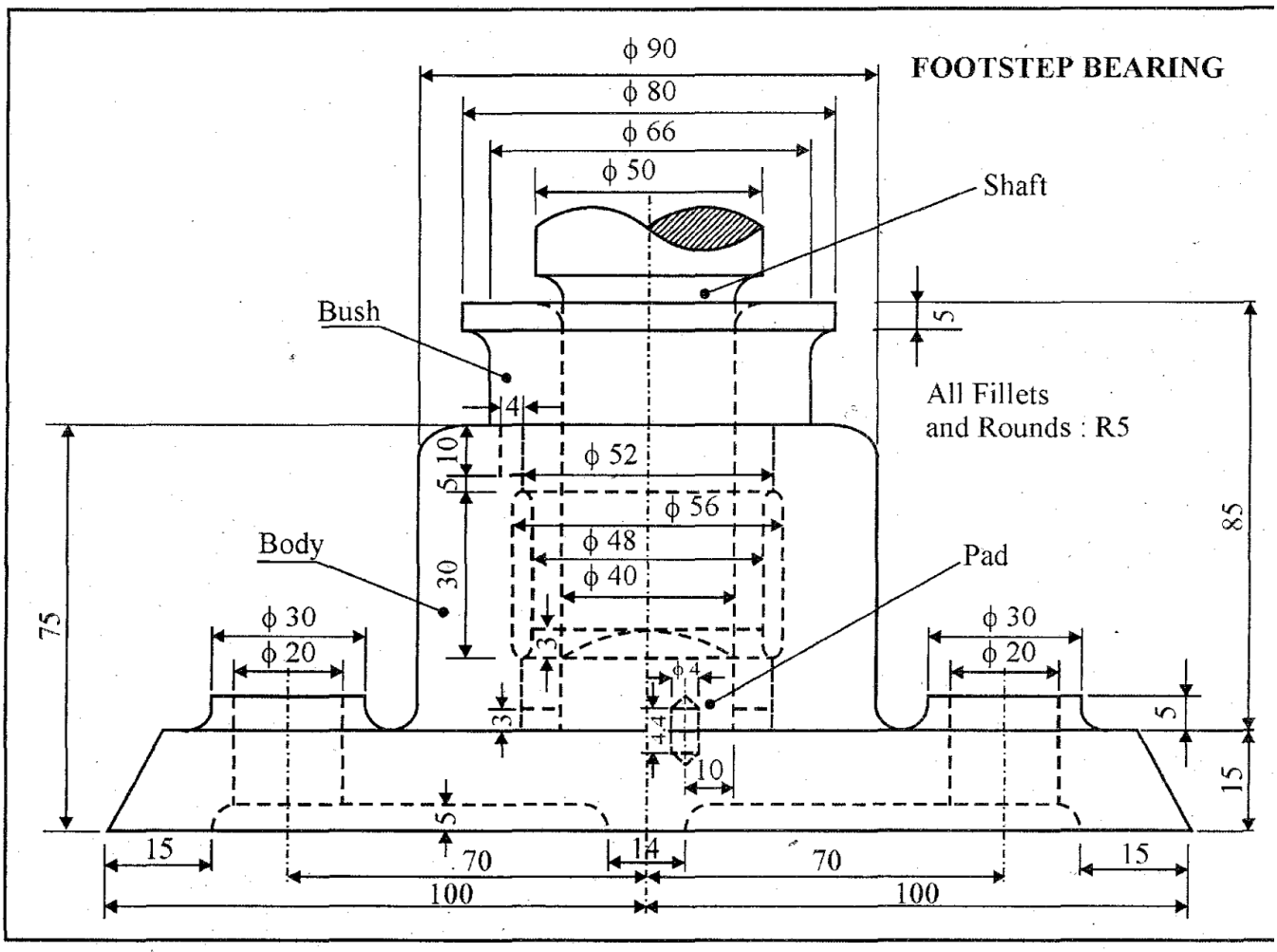

- End of Question Paper -