CBSE Class 12 Engineering Graphics 2014 - Set 68 - Compartment

Question Paper

Conducted by the Central Board of Secondary Education (CBSE)

Time Allowed: 3 Hours **Maximum Marks: 70**

General Instructions

(i) Attempt all the questions.
(ii) Use both sides of the drawing sheet, if necessary.
(iii) All dimensions are in millimetres.
(iv) Missing and mismatching dimensions, if any, may be suitably assumed.
(v) Follow the SP:46-2003 revised codes, with first angle method of projection.
(vi) In no view of question 2 are hidden edges or lines required.
(vii) In question 4, hidden edges or lines are to be shown in views without section.
(viii) Number your answers according to the questions.

Questions

1. Answer the following Multiple Choice Questions. Print the correct choice on your drawing sheet.

1(i). What will be the shape of a 'Square' in Isometric Projection ?

(A) Rhombus (B) Triangle
(C) Rectangle (D) Square

1(ii). Which among the following is *not* the form of V-thread profile ?

(A) Knuckle thread (B) BSW thread
(C) Metric thread external (D) Metric thread internal

1(iii). Which parts are joined by Riveting ?

(A) Two shafts (B) Two pipes
(C) Two plates (D) None of these

1(iv). What is the meaning of 'Flange' in Flanged Pipe Joint ?

(A) The thickness of the pipe (B) A projected circular ring or flared rim
(C) A thin circular packing ring (D) None of these

1(v). How many oval holes are there in the base of a footstep bearing ?

(A) 6 (B) 2
(C) 1 (D) 4

2(i). Construct an isometric scale of length 80 mm.

2(ii). A hexagonal prism (base side 25 mm and axial length 70 mm) is resting on its rectangular face. Its axis is perpendicular to VP. Draw its isometric projection and give all dimensions.

2(iii). A cone (base diameter 40 mm and height 60 mm) is placed centrally on the top face of a triangular prism (base side 70 mm and height 20 mm). One of the rectangular faces of the prism is away from the observer and is kept parallel to VP. The common axis is perpendicular to HP. Draw its isometric projection and give all dimensions. Show the common axis and the direction of viewing.

3(i). Draw to scale 1 : 1 the front view and side view of a **T-Headed Bolt** of size M20. Keep the axis parallel to both VP and HP. Give standard dimensions.

OR

3(i). Draw to scale 1 : 1 the front view and top view of a **Square Nut** of diameter 30 mm. Keep the axis vertical. The diagonal of the square face is parallel to HP and VP. Give standard dimensions.

3(ii). Sketch freehand the front view and top view of a **Cheese Head Screw** of size M20. Keep the axis vertical. Give standard dimensions.

OR

3(ii). Sketch freehand the front view, top view and side view of a **Woodruff Key** suitable for a shaft of diameter 40 mm. Give standard dimensions.

4. Figure 1 shows the details of the parts of a **Knuckle Joint**. Assemble these parts correctly and then draw to scale 1 : 1 the front view, lower half in section.

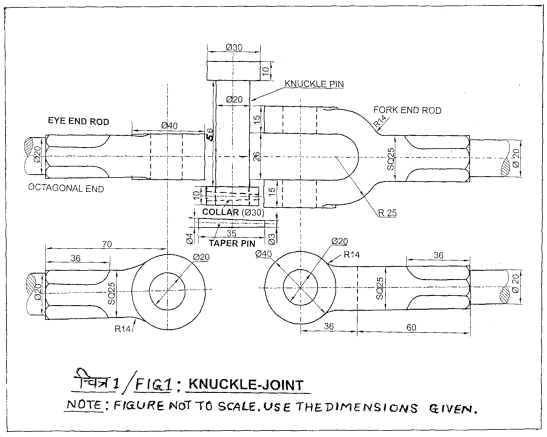

4(details). Print the title and the scale used. Draw the projection symbol. Give 6 important dimensions.

OR

4. Figure 2 shows the assembled views of a **Gib and Cotter Joint** for square rods. Disassemble the Fork and Gib and then draw the following views to scale 1 : 1. Keep the same position of Fork and Gib with respect to HP and VP.

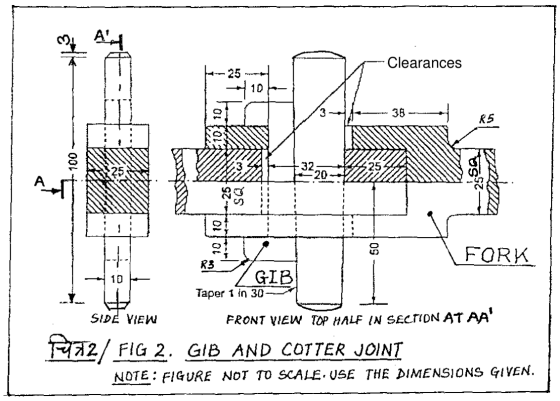

4(i). Front view of the Fork showing lower half in section and its top view

4(ii). Front view of Gib and its top view

4(details). Print titles of both and scale used. Draw projection symbol. Give 6 important dimensions.

- End of Question Paper -

collegedunia