CBSE Class 12 Physics 2018 - 55/1

Question Paper

Conducted by the Central Board of Secondary Education (CBSE)

Time Allowed: 3 Hours **Maximum Marks: 70**

General Instructions

(i) This question paper contains **26 questions**. All questions are **compulsory**.
(ii) The question paper is divided into Sections A, B, C, D, E.
(iii) Section A - Questions 1 to 5 carry 1 mark each.
(iv) Section B - Questions 6 to 10 carry 2 marks each.
(v) Section C - Questions 11 to 22 carry 3 marks each.
(vi) Section D - Question 23 carries 4 marks.
(vii) Section E - Questions 24 to 26 carry 5 marks each.
(viii) There is no overall choice. Where an internal choice is provided, attempt only one of the alternatives.

You may use the following values of physical constants wherever necessary:

$c = 3 \times 10^8$ m/s

$h = 6.63 \times 10^{-34}$ Js

$e = 1.6 \times 10^{-19}$ C

$\mu_0 = 4\pi \times 10^{-7}\ \mathrm{T\,m\,A^{-1}}$

$\varepsilon_0 = 8.854 \times 10^{-12}\ \mathrm{C^2\,N^{-1}\,m^{-2}}$

$\frac{1}{4\pi\varepsilon_0} = 9 \times 10^9\ \mathrm{N\,m^2\,C^{-2}}$

Mass of electron $(m_e) = 9.1 \times 10^{-31}$ kg

Mass of neutron $= 1.675 \times 10^{-27}$ kg

Mass of proton $= 1.673 \times 10^{-27}$ kg

Avogadro's number $= 6.023 \times 10^{23}$ per gm mole

Boltzmann constant $= 1.38 \times 10^{-23}\ \mathrm{JK^{-1}}$

Section A

1. A proton and an electron travelling along parallel paths enter a region of uniform magnetic field, acting perpendicular to their paths. Which of them will move in a circular path with higher frequency ?

2. Name the electromagnetic radiations used for (a) water purification, and (b) eye surgery.

3. Draw graphs showing variation of photoelectric current with applied voltage for two incident radiations of equal frequency and different intensities. Mark the graph for the radiation of higher intensity.

4. Four nuclei of an element undergo fusion to form a heavier nucleus, with release of energy. Which of the two — the parent or the daughter nucleus — would have higher binding energy per nucleon ?

5. Which mode of propagation is used by short wave broadcast services ?

Section B

6. Two electric bulbs P and Q have their resistances in the ratio of 1 : 2. They are connected in series across a battery. Find the ratio of the power dissipation in these bulbs.

7. A 10 V cell of negligible internal resistance is connected in parallel across a battery of emf 200 V and internal resistance 38 Ω as shown in the figure. Find the value of current in the circuit.

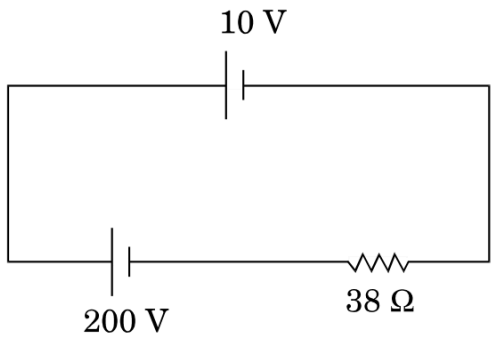

OR

7. In a potentiometer arrangement for determining the emf of a cell, the balance point of the cell in open circuit is 350 cm. When a resistance of 9 Ω is used in the external circuit of the cell, the balance point shifts to 300 cm. Determine the internal resistance of the cell.

8. (a) Why are infra-red waves often called heat waves ? Explain.

(b) What do you understand by the statement, "Electromagnetic waves transport momentum" ?

9. If light of wavelength 412.5 nm is incident on each of the metals given below, which ones will show photoelectric emission and why ?

Metal	Work Function (eV)
Na	1·92
K	2·15
Ca	3·20
Mo	4·17

10. A carrier wave of peak voltage 15 V is used to transmit a message signal. Find the peak voltage of the modulating signal in order to have a modulation index of 60%.

Section C

11. Four point charges Q, q, Q and q are placed at the corners of a square of side 'a' as shown in the figure.

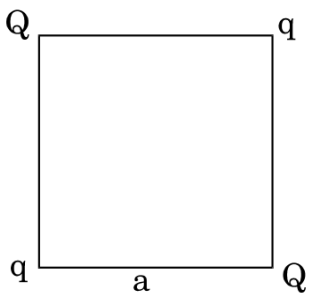

Find the

(a) resultant electric force on a charge Q, and

(b) potential energy of this system.

OR

11. (a) Three point charges q, $-4q$ and $2q$ are placed at the vertices of an equilateral triangle ABC of side 'l' as shown in the figure. Obtain the expression for the magnitude of the resultant electric force acting on the charge q.

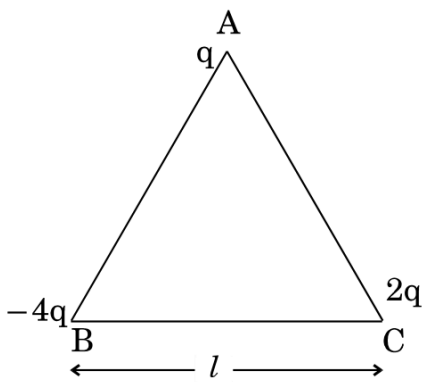

(b) Find out the amount of the work done to separate the charges at infinite distance.

12. (a) Define the term 'conductivity' of a metallic wire. Write its SI unit.

(b) Using the concept of free electrons in a conductor, derive the expression for the conductivity of a wire in terms of number density and relaxation time. Hence obtain the relation between current density and the applied electric field $\vec{E}$.

13. A bar magnet of magnetic moment 6 J/T is aligned at 60° with a uniform external magnetic field of 0.44 T. Calculate (a) the work done in turning the magnet to align its magnetic moment (i) normal to the magnetic field, (ii) opposite to the magnetic field, and (b) the torque on the magnet in the final orientation in case (ii).

14. (a) An iron ring of relative permeability μ_r has windings of insulated copper wire of n turns per metre. When the current in the windings is I, find the expression for the magnetic field in the ring.

(b) The susceptibility of a magnetic material is 0.9853. Identify the type of magnetic material. Draw the modification of the field pattern on keeping a piece of this material in a uniform magnetic field.

15. (a) Show using a proper diagram how unpolarised light can be linearly polarised by reflection from a transparent glass surface.

(b) The figure shows a ray of light falling normally on the face AB of an equilateral glass prism having refractive index $\frac{3}{2}$, placed in water of refractive index $\frac{4}{3}$. Will this ray suffer total internal reflection on striking the face AC ? Justify your answer.

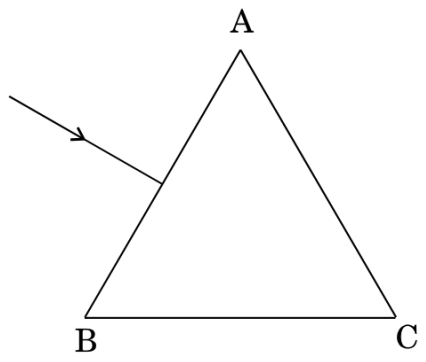

16. (a) If one of two identical slits producing interference in Young's experiment is covered with glass, so that the light intensity passing through it is reduced to 50%, find the ratio of the maximum and minimum intensity of the fringe in the interference pattern.

(b) What kind of fringes do you expect to observe if white light is used instead of monochromatic light ?

17. A symmetric biconvex lens of radius of curvature R and made of glass of refractive index 1.5, is placed on a layer of liquid placed on top of a plane mirror as shown in the figure. An optical needle with its tip on the principal axis of the lens is moved along the axis until its real, inverted image coincides with the needle itself. The distance of the needle from the lens is measured to be x. On removing the liquid layer and repeating the experiment, the distance is found to be y. Obtain the expression for the refractive index of the liquid in terms of x and y.

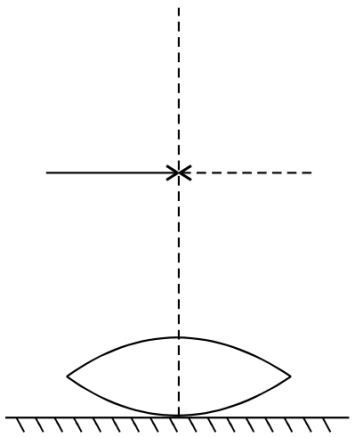

18. (a) State Bohr's postulate to define stable orbits in hydrogen atom. How does de Broglie's hypothesis explain the stability of these orbits ?

(b) A hydrogen atom initially in the ground state absorbs a photon which excites it to the $n = 4$ level. Estimate the frequency of the photon.

19. (a) Explain the processes of nuclear fission and nuclear fusion by using the plot of binding energy per nucleon (BE/A) versus the mass number A.

(b) A radioactive isotope has a half-life of 10 years. How long will it take for the activity to reduce to 3.125% ?

20. (a) A student wants to use two p-n junction diodes to convert alternating current into direct current. Draw the labelled circuit diagram she would use and explain how it works.

(b) Give the truth table and circuit symbol for NAND gate.

21. Draw the typical input and output characteristics of an n-p-n transistor in CE configuration. Show how these characteristics can be used to determine (a) the input resistance (r_i), and (b) current amplification factor (β).

22. (a) Give three reasons why modulation of a message signal is necessary for long distance transmission.

(b) Show graphically an audio signal, a carrier wave and an amplitude modulated wave.

Section D

23. The teachers of Geeta's school took the students on a study trip to a power generating station, located nearly 200 km away from the city. The teacher explained that electrical energy is transmitted over such a long distance to their city, in the form of alternating current (ac) raised to a high voltage. At the receiving end in the city, the voltage is reduced to operate the devices. As a result, the power loss is reduced. Geeta listened to the teacher and asked questions about how the ac is converted to a higher or lower voltage.

(a) Name the device used to change the alternating voltage to a higher or lower value. State one cause for power dissipation in this device.

(b) Explain with an example, how power loss is reduced if the energy is transmitted over long distances as an alternating current rather than a direct current.

(c) Write two values each shown by the teachers and Geeta.

Section E

24. (a) Define electric flux. Is it a scalar or a vector quantity ? A point charge q is at a distance of $d/2$ directly above the centre of a square of side d, as shown in the figure. Use Gauss' law to obtain the expression for the electric flux through the square.

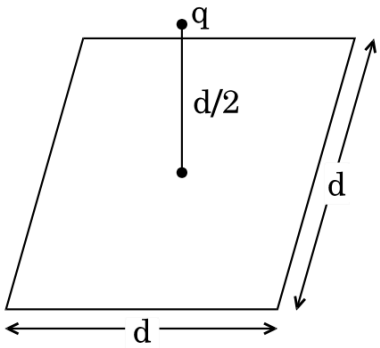

(b) If the point charge is now moved to a distance 'd' from the centre of the square and the side of the square is doubled, explain how the electric flux will be affected.

OR

24. (a) Use Gauss' law to derive the expression for the electric field ($\vec{E}$) due to a straight uniformly charged infinite line of charge density λ C/m.

(b) Draw a graph to show the variation of E with perpendicular distance r from the line of charge.

(c) Find the work done in bringing a charge q from perpendicular distance r_1 to r_2 ($r_2 > r_1$).

25. (a) State the principle of an ac generator and explain its working with the help of a labelled diagram. Obtain the expression for the emf induced in a coil having N turns each of cross-sectional area A, rotating with a constant angular speed 'ω' in a magnetic field $\vec{B}$, directed perpendicular to the axis of rotation.

(b) An aeroplane is flying horizontally from west to east with a velocity of 900 km/hour. Calculate the potential difference developed between the ends of its wings having a span of 20 m. The horizontal component of the Earth's magnetic field is 5×10^{-4} T and the angle of dip is 30°.

OR

25. A device X is connected across an ac source of voltage $V = V_0 \sin \omega t$. The current through X is given as $I = I_0 \sin\left(\omega t + \frac{\pi}{2}\right)$.

(a) Identify the device X and write the expression for its reactance.

(b) Draw graphs showing variation of voltage and current with time over one cycle of ac, for X.

(c) How does the reactance of the device X vary with frequency of the ac ? Show this variation graphically.

(d) Draw the phasor diagram for the device X.

26. (a) Draw a ray diagram to show image formation when the concave mirror produces a real, inverted and magnified image of the object.

(b) Obtain the mirror formula and write the expression for the linear magnification.

(c) Explain two advantages of a reflecting telescope over a refracting telescope.

OR

26. (a) Define a wavefront. Using Huygens' principle, verify the laws of reflection at a plane surface.

(b) In a single slit diffraction experiment, the width of the slit is made double the original width. How does this affect the size and intensity of the central diffraction band ? Explain.

(c) When a tiny circular obstacle is placed in the path of light from a distant source, a bright spot is seen at the centre of the obstacle. Explain why.

- End of Question Paper -